ALLIANCE
PLATFORM LIFTS

APL

Heavy-Duty Platform Lift

AL-PLATFORMLIFTS.CO.UK

Robust, reliable and built for heavy loads.

This lift uses an ultra-reliable and low-maintenance self-sustaining nut and screw drive system. It is robust, reliable, and designed for maximum flexibility, carrying 1,000kg with a shaft pit of only 110mm.

1,000kg	13m	5	110mm
RATED LOAD	MAXIMUM TRAVEL	STOPS	PIT DEPTH

UP TO 55 PLATFORM SIZES

The APL Heavy-Duty Platform Lift supports up to 55 different platform sizes for building regulation compliance.

People, goods and everything between

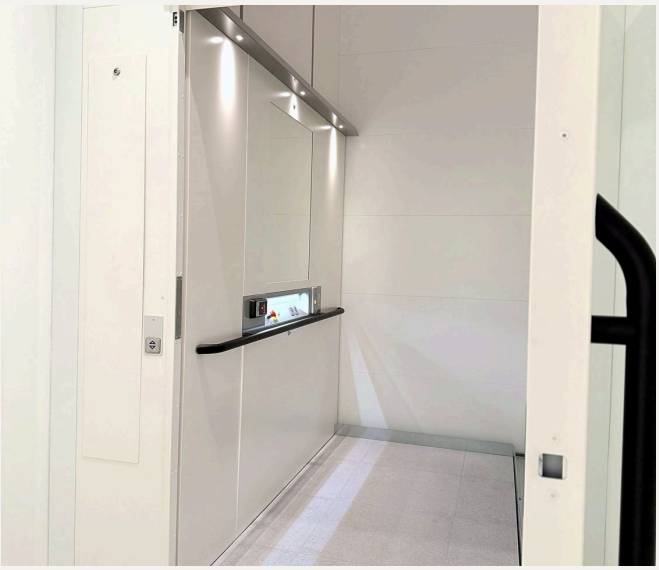

Retail and galleries

A large, bright platform that carries customers, trolleys and stock.

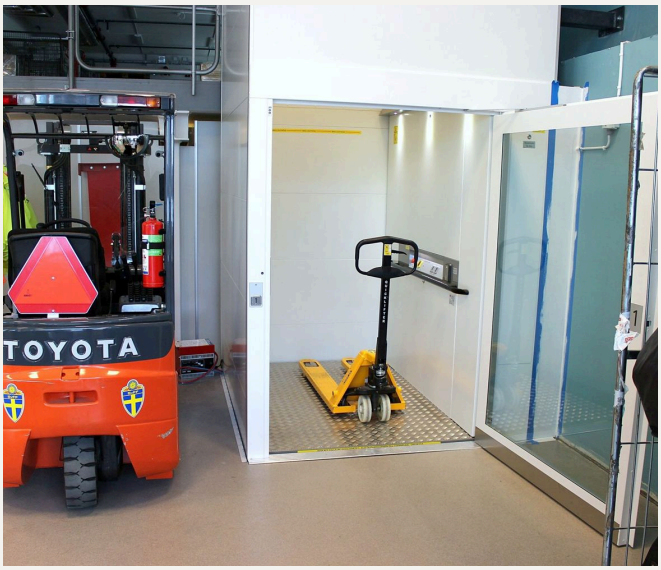

Warehouses and stores

Room for pallet trucks and loads of up to 1,000kg.

Showrooms

A platform big enough for vehicles, displays and bulky items.

Offices and schools

Fits beside stairs, with swing doors on up to 3 sides.

Light, open, spacious.

Every lift comes with a modern full-height platform back, complete with in-built lighting. Hold the platform button to travel; landing buttons need one touch.

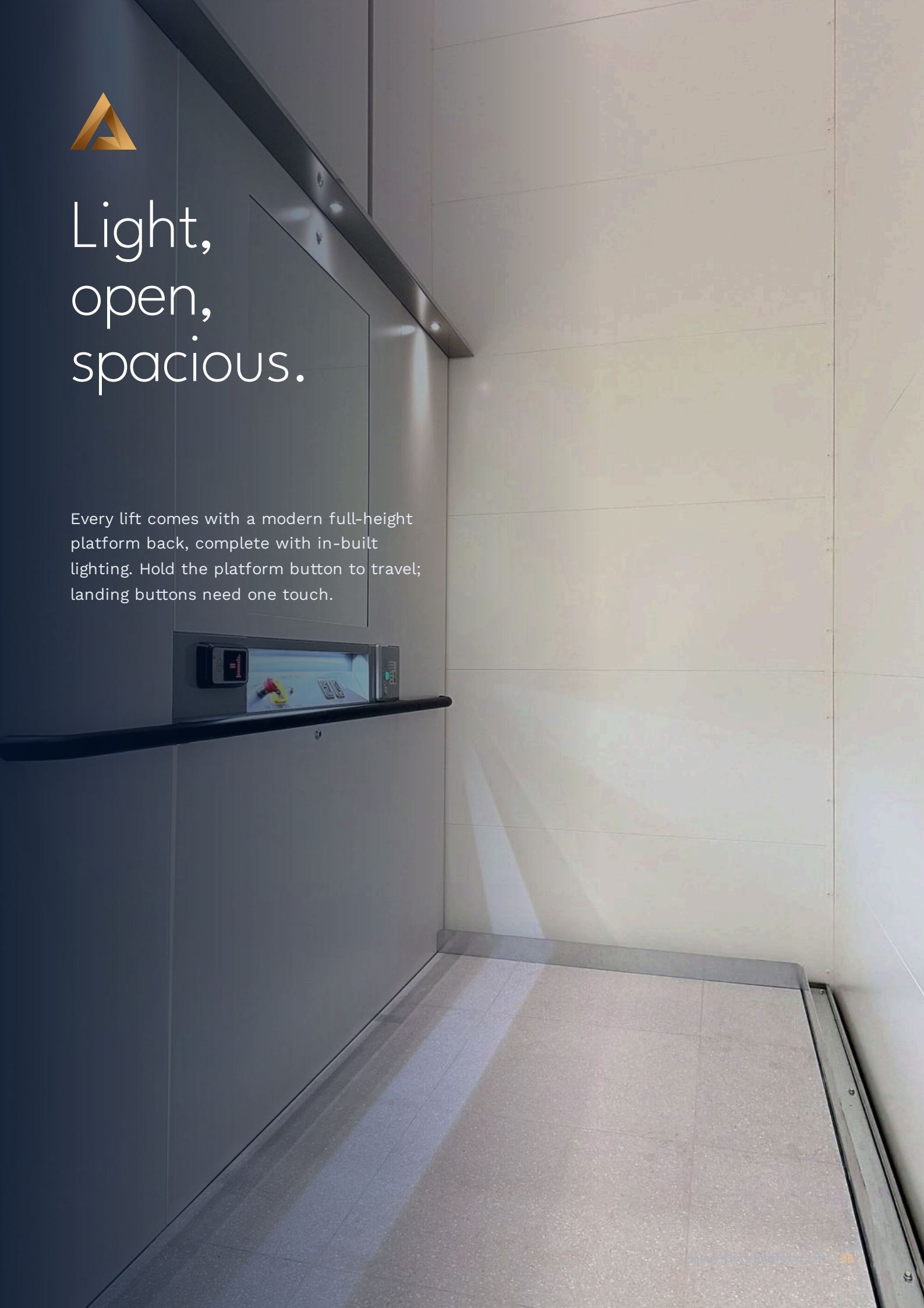

FULLY GLAZED DOORS

Wide doors, fully glazed as standard, give fantastic loading opportunities in every situation.

Designed for everyday use

01

Nut and screw drive

An ultra-reliable, low-maintenance self-sustaining drive that holds the platform at every point.

02

Battery emergency lowering

Included as standard.

03

Programmable control

A programmable logic controller (PLC) with a frequency controller for smooth travel.

04

Tactile buttons

All buttons are tactile with braille: one touch at the doors, hold-to-run on the platform.

Strong, flexible and quick to install

01

55 platform sizes

With a pit of only 110mm, there is a size to fit almost any building.

02

Full-height platform back

A modern design with built-in lighting for every journey.

03

Installed in 2–4 days

Plug-and-play construction for a quick, tidy installation.

04

Public and industrial

Hospitals, care homes, arenas, schools, offices, workshops and stores.

Made to suit the building

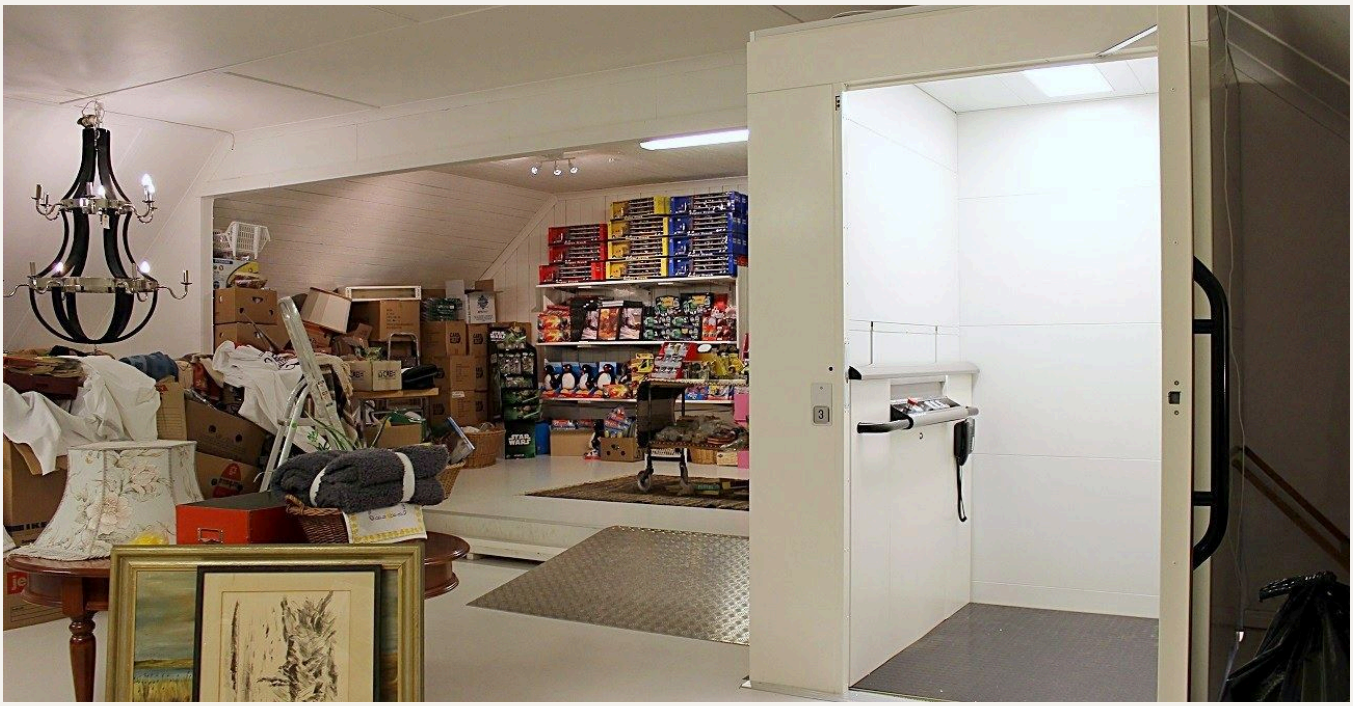

COLOURS

Laminated sandwich panels and platform in RAL 9003 white as standard. All powder coated, with other RAL colours available on request.

RAL 9003 white (standard)

Altro black floor (standard)

Glazed panels (option)

Any RAL colour

OPTIONS

EI60 fire doors
In place of the standard fully glazed doors

Automatic door openers
Powered opening for the landing doors

Key control and elbow buttons
Restrict use, or large elbow-operated buttons

Stainless steel handrail and mirror
In place of the standard handrail, plus a mirror

Glazed shaft panels
Glass in place of solid panels

Level indicator and arrival bell
With voice announcement available

Emergency autodialler
With GSM, for two-way communication

Folding seat and flooring
A fold-down seat, and other floor finishes

Plan to fit

Example platform: 1,400 x 2,500mm. Every quotation includes a drawing for your site.

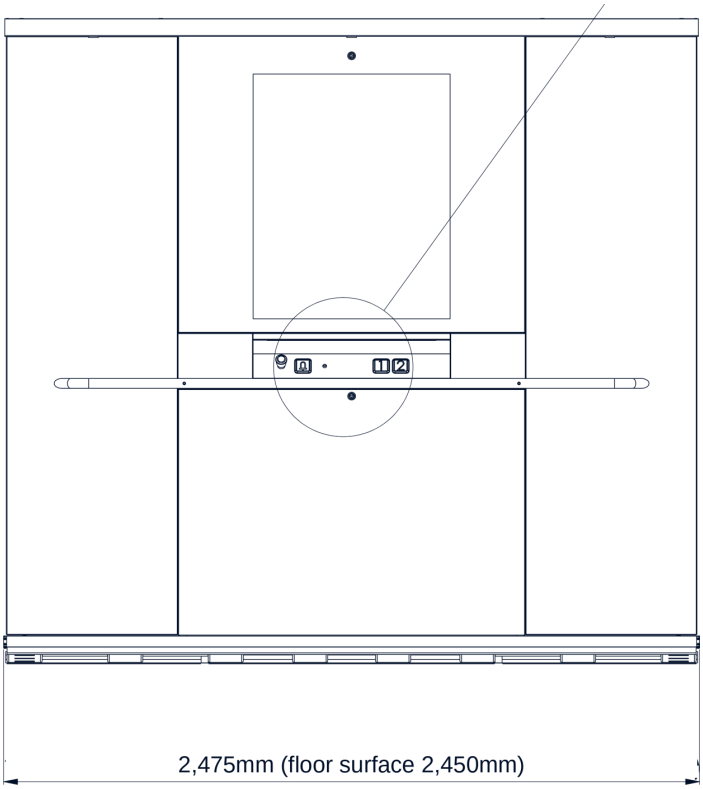

FRONT VIEW

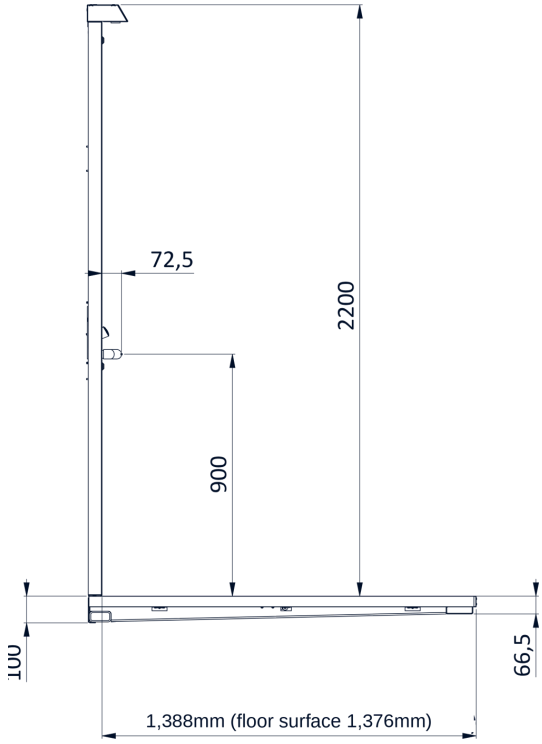

SIDE VIEW

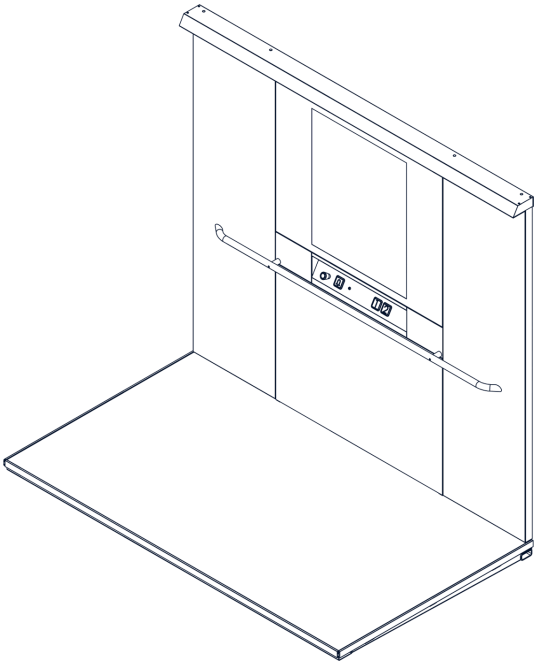

PLATFORM

KEY DIMENSIONS

Platform floor	1,376 x 2,450mm
Internal shaft	1,400 x 2,500mm
Overall footprint	1,830 x 2,580mm
Floor cut-out	Footprint +30mm
Platform back height	2,200mm
Handrail height	900mm
Pit	110mm

Internal shaft sizes are measured inside the shaft walls. The overall footprint is the space the lift needs in your building.

At a glance

1,000kg	13m	0.15m/s	110mm
RATED LOAD	MAXIMUM TRAVEL	MAXIMUM SPEED	PIT DEPTH

PERFORMANCE

Installation	Indoors
Stops	Up to 5
Top height	2.3m above the top floor
Drive	Self-sustaining nut and screw, 4kW motor
Power supply	380–400V 3-phase 50/60Hz 16A, frequency controller

CONTROL AND SAFETY

Control	Programmable logic controller (PLC)
Buttons	One touch at the doors, hold-to-run on the platform, tactile with braille
Emergency	Battery emergency lowering as standard
Compliance	Machinery Directive 2006/42/EC

CONSTRUCTION AND FINISHES

Shaft	Laminated sandwich panels in RAL 9003 white, 25mm thick. Glazed panels optional
Platform	RAL 9003 powder coated, full-height platform back with lighting, Altro black flooring as standard
Doors	Wide, fully glazed swing doors on up to 3 sides. EI60 fire doors available
Colours	RAL 9003 standard, special colours on request

55 PLATFORM SIZES TO CHOOSE FROM (MM)

Widths: 1,000 · 1,100 · 1,200 · 1,300 · 1,400

Depths: 1,500 to 2,500 in 100mm steps

Any width with any depth. Footprint = platform size plus:

Floor cut-out: footprint +30mm each way. With doors on side B only, the lift electrics go in a separate box (500 x 600 x 200mm).

Doors on sides	Add to width	Add to depth
A or C	+430mm	+80mm
A and C	+430mm	+110mm
A or C, plus B	+460mm	+80mm
A, C and B	+460mm	+110mm
B only	+460mm	+55mm

From survey to handover

01
Survey
We visit, measure and advise on the best position.

02
Drawing
A site-specific drawing and builder's work list for sign-off.

03
Install
Installation takes only 2–4 days, thanks to the innovative design.

04
Handover
Testing, training and ongoing service.

BUILDER'S WORK

Pit	110mm
Top height	2.3m above the top floor
Power	380–400V 3-phase, 16A
Fixing	Guide frame fixed to the wall behind, loads supplied for your engineer

Made to your specification

Every lift can be tailored with a wide range of options. These are the most popular.

Fully glazed doors

Level indicator

Key control

Fold-down seat

FLOORING

Altro Walkway Pitch
Black, standard

Altro Walkway Dolphin
Grey

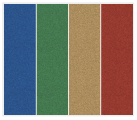

Altro Walkway
Custom colour

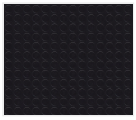

Norament 825 0702
Black rubber

Norament 825 0749
Grey rubber

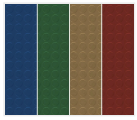

Studded rubber
Custom colour

Checker plate
Aluminium

Prepared for tiles
20mm deep

No flooring
Supplied by others

Tiles may change the pit depth and rated load. Custom colour swatches show examples only.

DOORS

- EI60 fire doors, with vision panel or fully glazed
- Taller doors, up to 2,800mm
- Automatic door openers and sensors
- Stainless steel door front, kick plate and handle
- Door handles in a special colour

CALLS AND CONTROLS

- Key operation, or button plus key on/off
- External call buttons, wired or in a box
- Wireless elbow call button
- Double and triple call/send buttons
- Digital level indicator on the door front
- Arrival gong

PLATFORM

- Fold-down seat
- Stainless steel handrail and control panel
- Mirror on the platform back
- Raised edges, 100mm high
- Photocell on the platform
- A choice of flooring (see above)

COMMUNICATION AND SAFETY

- Voice station with 4G autodialler
- Emergency autodialler with GSM
- Hearing loop
- Level indicator with voice announcement
- Fire drive and operation alarm
- Return to a designated floor, emergency lowering from the platform

SHAFT AND ELECTRICAL

- Shaft roof with LED panel
- Automatic ceiling light
- Glass panels, standard or special heights
- Covered machine side
- Separate electrical cabinet
- Halogen-free cables, special colour painting

Heavy loads, light footprint.

A 110mm pit and a self-contained shaft mean the APL Heavy-Duty Platform Lift fits where a conventional goods lift would need major building work.

UP TO 1,000KG

Room for pallet trucks, trolleys, wheelchairs and their companions, on a platform up to 1,400 x 2,500mm.

ALLIANCE
PLATFORM LIFTS

Designing, supplying and installing lifts across the UK for over 15 years

DRAWINGS FOR SIGN-OFF

A layout drawing and builder's work list for every project

24/7 SUPPORT

Maintenance and call-out through our nationwide service network

01206 803 132

sales@aplifts.co.uk

AL-PLATFORMLIFTS.CO.UK

ISO 9001 · ISO 14001 · ISO 45001 · SAFECONTRACTOR · CONSTRUCTIONLINE GOLD · LEIA MEMBER